User Manual and Spare Parts List

GARUDAN®

GARUDAN GC-330-543H/L40
GARUDAN GC-331-543H/L40

ANITA B s.r.o.
Hliníky 2068
680 01 Boskovice
Czech Republic

tel: +420 516 454 774,+420 516 453 496
fax: +420 516 452 751
e-mail: info@anita.cz

≡CONTENT≡

1. PRECAUTIONS FOR USER ____ 1
2. SPECIFICATION ____ 2
3. PREPARATION FOR OPERATION ____ 2
(1) Cleaning the machine ____ 2
(2) Examination ____ 2
(3) Lubrication ____ 2
(4) Testing ____ 3
4. HOW TO ATTACH A NEEDLE ____ 3
5. WINDING OF BOBBIN THREAD ____ 4
6. ADJUSTMENT OF THE BOBBIN WINDER ____ 4
7. THREADING ____ 5
8. REMOVING AND INSERTING THE BOBBIN ____ 5
9. ADJUSTING THE THREAD TENSION ____ 6
10. ADJUSTMENT OF PRESSER PRESSURE ____ 6
11. ADJUSTMENT OF WALKING FOOT AND PRESSER FOOT ____ 7
12. ADJUSTMNET OF STITCH LENGTH AND FORWARD/BACKWARD SEWING ____ 7
13. FEED DOG HEIGHT ____ 8
14. ADJUSTING THE HEIGHT OF THE NEEDLE BAR ____ 8

1、PRECAUTIONS FOR USER

（1） Precautions for Safety

① When turning the power on, keep your hands and fingers away from the area around/under the needle and the area around the pulley.

② The power must be turned off when the machine is not used, or when the operator leaves his/her seat.

③ The power must be turned off before installing or removing the "V" belt, adjusting the machine, or when replacing.

④ Avoid placing fingers, hairs, bars etc. near the pulley, the "V" belt and the motor when the machine is in operation.

⑤ Do not put fingers under/around the needle or the pulley when the machine is in operation.

（2） Precautions before Operation

① Never operate the machine before it is lubricated fully.

② When a new sewing machine is first turned on, verify the rotational direction of the pulley with the power on.

(The pulley should rotate counterclockwise when viewed from the pulley)

③ Verify the voltage and phase (single or three) with those given on the motor nameplate.

（3） Precautions for Operating Conditions

① Avoid using the machine at abnormally high temperature（35℃ or higher）or low temperature（5℃ or lower）.

② Avoid using the machine in dusty conditions.

③ Avoid using the machine in areas where there are too much electrical noise which resulted from the high-frequency weld and others.

2、SPECIFICATION

Max. sewing speed (r.p.m)		800 r.p.m
Needle No.		DY×3 26#
Needle bar stroke (mm)		56
Thread take-up lever stroke (mm)		96
Stitch length (mm)		0-11
Presser-foot stroke	By hand (mm)	13
	By knee (mm)	20

3、PREPARATION FOR OPERATION

（1） Cleaning the machine

Before leaving the factory, the machine parts are coated with rust-preventive grease, which may be hardened and contaminated by dust during storage and shipment. This grease must be removed with gasoline.

（2） Examination

Though every machine is confirmed by strict inspection and test before leaving the factory, the machine parts may be loose or deformed after long distance transportation with jolt. A thorough examination must be performed after cleaning the machine. Turn the pulley to see if there is running obstruction, parts collision, uneven resistance or abnormal noise. If these exist, adjustment must be made accordingly before run-in operation.

（3） Lubrication (Fig.1)

When a new sewing machine is used for the first time, or sewing machine left out of use for considerably long time is used again, replenish a suitable amount of oil to the portions indicated by arrow in below figure.

CAUTION: Please use white spindle oil.

Always keep the presser lifted before attempting a dry run.

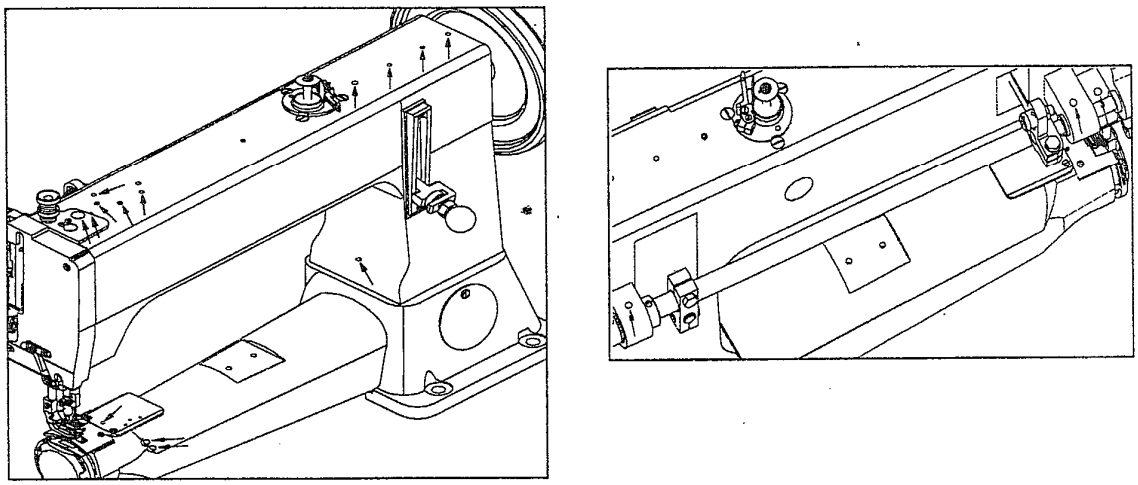

Fig.1

（4） Testing

In order to get the best working situation, run the sewing machine in a low speed for about 1 month after lubricated fully. Then increase the speed to the need one.

4、HOW TO ATTACH A NEEDLE (Fig.2)

CAUTION： Before using the following procedures, be sure to turn the power switch off.

The needle used by this sewing machine is DY×3 26#。 During operation, proper needle can be chosen according to the

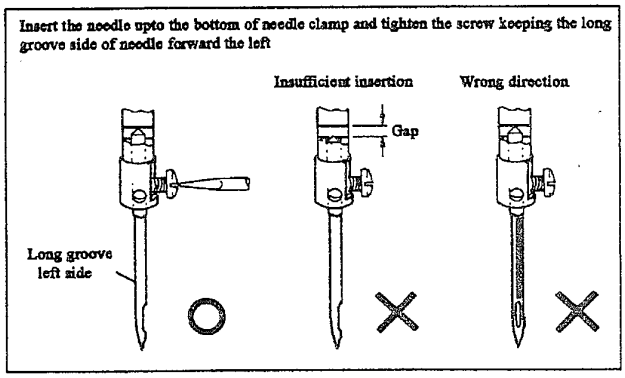

Fig.2

sewing thread. (the sewing thread should be able to pass the pinhole.)

5、WINDING OF BOBBIN THREAD (Fig.3)

(1) Push the bobbin ③ on the bobbin winder shaft as far as it will go.

(2) Bring the thread forward toward the bobbin and wind from below in clockwise direction several times around the bobbin.

(3) Push the lever ⑤ toward other side so that the driving wheel and driven wheel will engage and then start the machine.

(4) The driven wheel will automatically be free from the driving wheel and stop after the bobbin is filled with thread.

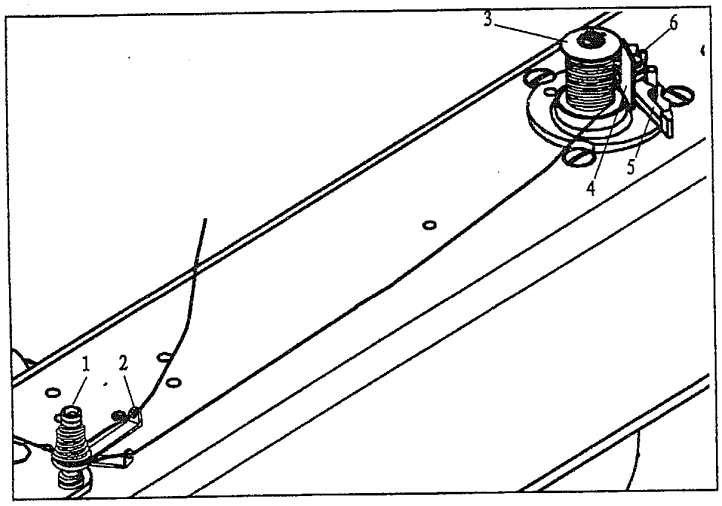

Fig.3

6、ADJUSTMENT OF THE BOBBIN WINDER (Fig.3)

(1) In case of uneven winding

If the thread dose not wind evenly on the bobbin, loosen the nut ① and move the bracket ② to the right or to the left as may be required, then tighten the nut.

(2) Winding amount of thread

Adjusting ⑥ can increase or decrease the amount of thread wound on the bobbin.

(3) Winding strength

Strength of the winding can be adjusted with the nut ①.

7、THREADING (Fig.4)

Raise the needle bar to its highest position and route the upper thread in the order illustrated below.

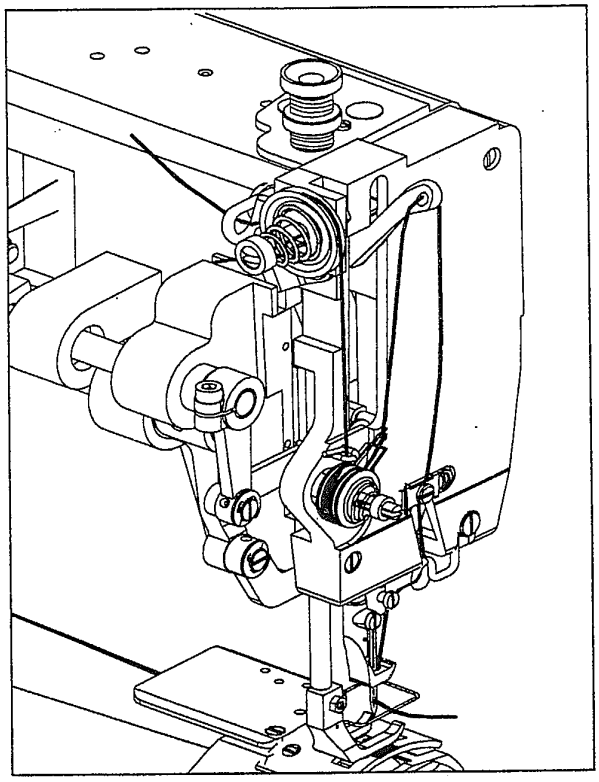

Fig.4

8、REMOVING AND INSERTING THE BOBBIN

(1) Removing: Open the shuttle race cap and the bobbin holder, then take out the bobbin.

(2) Installation: Put the bobbin in the rotary hook case, Permit about 5 cm of bobbin thread to hand down freely. Install the bobbin in the bobbin case so that the thread wound direction is clockwise. Then close the rotary hook and the shuttle race cap.

9、ADJUSTING THE THREAD TENSION (Fig.5)

For ordinary stitching, the tension of the upper and the lower threads should be equal.

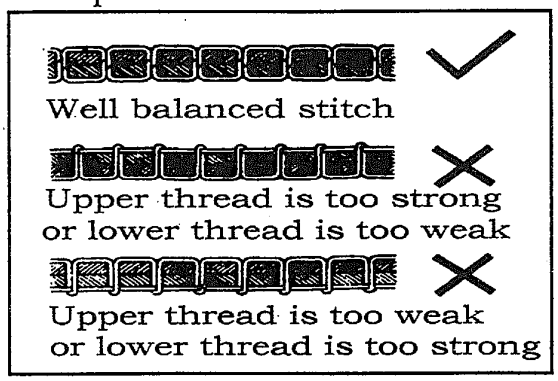

Fig.5

(1) Tension of the Upper thread

Before adjusting the tension of the upper thread, be sure that presser foot is let down. To adjust tension, turn serrated nut on tension device to the right (clockwise) to increase tension and to the left (counter-clockwise) if you desire to decrease the tension.

(2) Tension of the lower thread

The lower thread tension is controlled by the larger screw near the end of the spring at the outside of the bobbin case. Turning this screw to the right (clockwise) will increase the thread tension, while turning it to the left (counter-clockwise) will decrease the tension.

10、ADJUSTMENT OF PRESSER PRESSURE (Fig.6)

(1) Pressure should be adjusted according to the material to be sewn.

(2) Pressure on both the walking foot and the presser foot can be adjusted. (The adjusting screw has been set before shipment.)

(3) Sewing pressure should be adjusted to the minimum required strength.

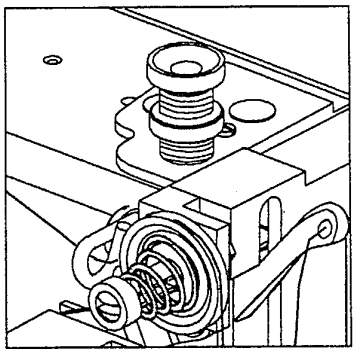

Fig.6

11、ADJUSTMENT OF WALKING FOOT AND PRESSER FOOT (Fig.7)

(1) The alternating movement on the walking foot and presser foot can be adjusted by changing the position relations of the parts of the presser foot lifting mechanism.

(2) Changing the position relation of the connecting link 2 and the crank 3 can complete the adjustment.

(3) Adjustment should be changed according to the thickness of the material to be sewn.

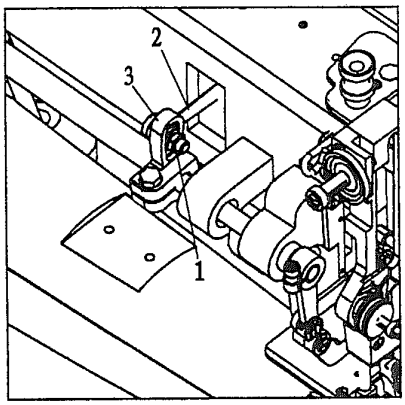

Fig.7

12 、ADJUSTMENT OF STITCH LENGTH AND FORWARD/BACKWARD SEWING (Fig.8)

(1) Adjusting the stitch length adjusting bolt can change the stitch length.

(2) Stitch length can be adjusted between 0-11mm.

(3) Setting the stitch length adjusting bolt above "0" can backstitch.

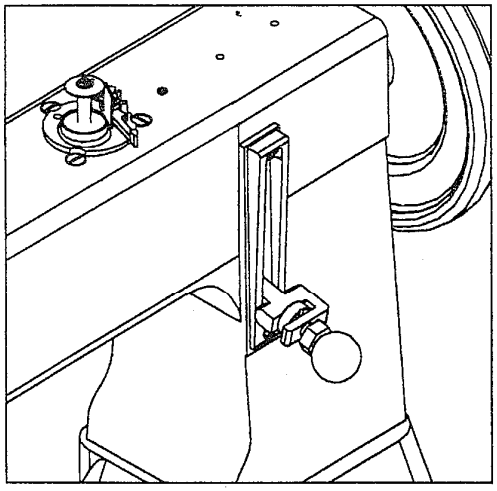

Fig.8

13、FEED DOG HEIGHT (Fig.9)

The feed dog should be 1.5 mm higher than the vertex of the needle plate. Adjustment of the feed dog height can be done as follows:

(1) Turn the machine pulley so as to raise the feed dog to its highest point.

(2) Loosen the screw of the feed dog and adjust the height by raising or lowering it. Then tighten the screw.

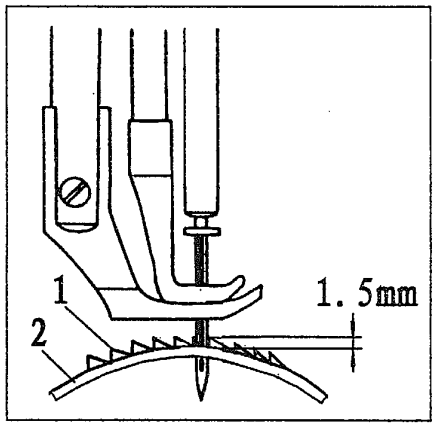

Fig.9

14、ADJUSTING THE HEIGHT OF THE NEEDLE BAR (Fig.10)

When the needle bar is at its highest point, normally the measurement between the highest point of the needle plate and the

needlepoint is 28 mm. When this distance need to be adjusted, the steps is as follows:

(1) Take down the face plate, adjust the needle bar to its highest position.

(2) Loosen the screw of needle bar connecting stud screw.

(3) Adjust the needle bar to the right position.

(4) Tighten the screw.

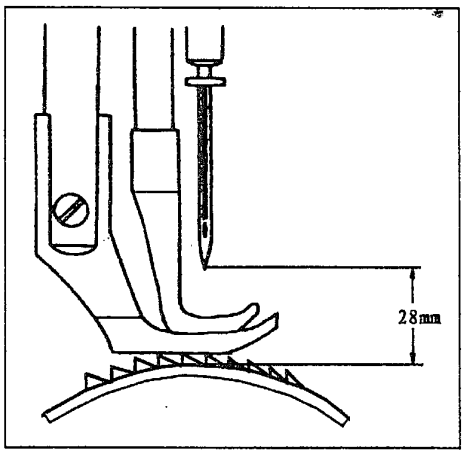

Fig.10

Spare Parts List

GARUDAN®

GC-330-543

ANITA B, s.r.o.
Hliníky 2068
680 01 Boskovice
Czech Republic
tel: +420 516 454 774, 516 453 496
fax: +420 516 452 751
e-mail: info@anita.cz

A.ARM BED AND ITS ACCESSORIES

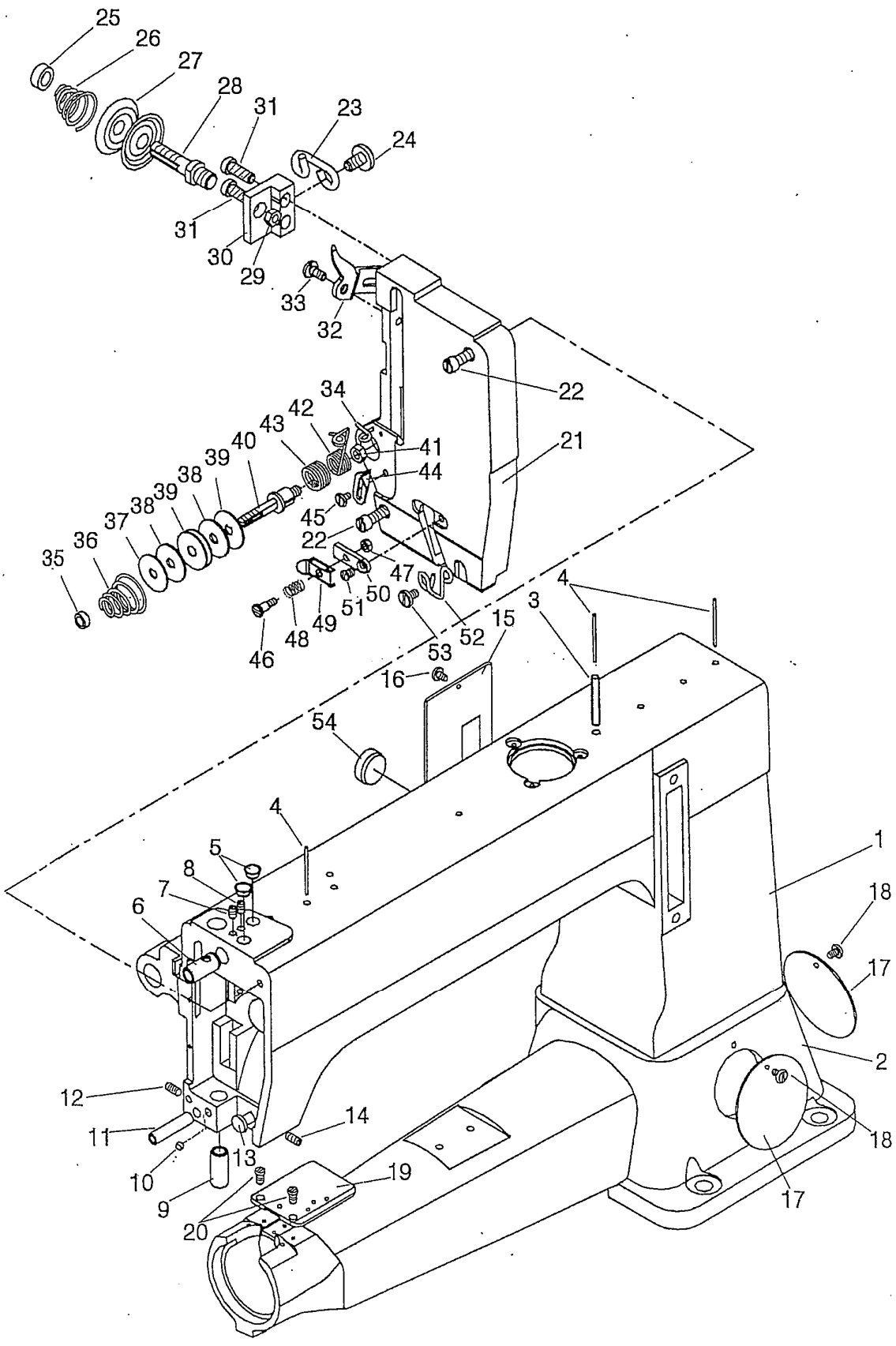

A.ARM BED AND ITS ACCESSORIES

Fig. No.	Part No.	Description	Pcs.	Remarks
A01	H7208B8001	Arm	1	
A02	H7210B8001	Bed	1	
A03	H7215B8001	Oil pipe	1	
A04	H7216B8001	Oil wick	3	
A05	HA307B0674	Rubber plug	2	
A06	H7217B8001	Needle bar guide bracket stud bushing	1	
A07	HA100C2020	Screw	1	SM15/64(28)×10
A08	HA100C2020	Screw	1	SM15/64(28)×10
A09	H7218B8001	Presser bar bushing	1	
A10	HA305E0662	Screw	1	SM15/64(28)×4.5
A11	H7219B8001	Pin	1	
A12	HA100C2020	Screw	1	SM15/64(28)×10
A13	H7220B8001	Mandril of needle bar guide bracket	1	
A14	H2405D0664	Screw	1	SM15/64(28)×14
A15	H7225B8001	Arm side cover	1	
A16	HA100B2060	Screw	1	SM11/64(40)×9
A17	H7228B8001	Round cover	2	
A18	HA100B2060	Screw	2	SM11/64(40)×9
A19	H7235B8001	Worktable for accessories	1	
A20	HA7311C806	Screw	2	SM11/64(40)×9
A21	H7236B8001	Face plate	1	
A22	H7238B8001	Screw	2	SM15/64(28)×22
A23	H7240B8001	Thread guide	1	
A24	H3410C301K	Screw	1	SM9/64(40)×6.5
A25	HA115B0702	Nut	1	
A26	H7241B8001	Tension spring	1	
A27	HA310B0705	Tension disc	2	
A28	H7242B8001	Tension screw stud	1	
A29	H2010J0066	Tension nut	1	SM9/32(28)
A30	H7243B8001	Thread tension regulator complete base	1	
A31	HA111G0683	Screw	2	SM11/64(40)×12
A32	H7244B8001	Tension releasing disc	1	
A33	H7245B8001	Screw	1	SM3/16"(28)
A34	H7246B8001	Thread guide	1	
A35	HA115B0702	Tension nut	1	
A36	H7241B8001	Tension spring	1	
A37	H7248B8001	Washer	2	
A38	H7249B8001	Felt	2	
A39	H7250B8001	Damping plate	1	
A40	H7251B8001	Tension screw stud	1	
A41	HA710N0683	Temsopm nut	1	SM15/64(28)
A42	H7253B8001	Thread take-up spring	1	
A43	II7254B8001	Spring	1	

A.ARM BED AND ITS ACCESSORIES

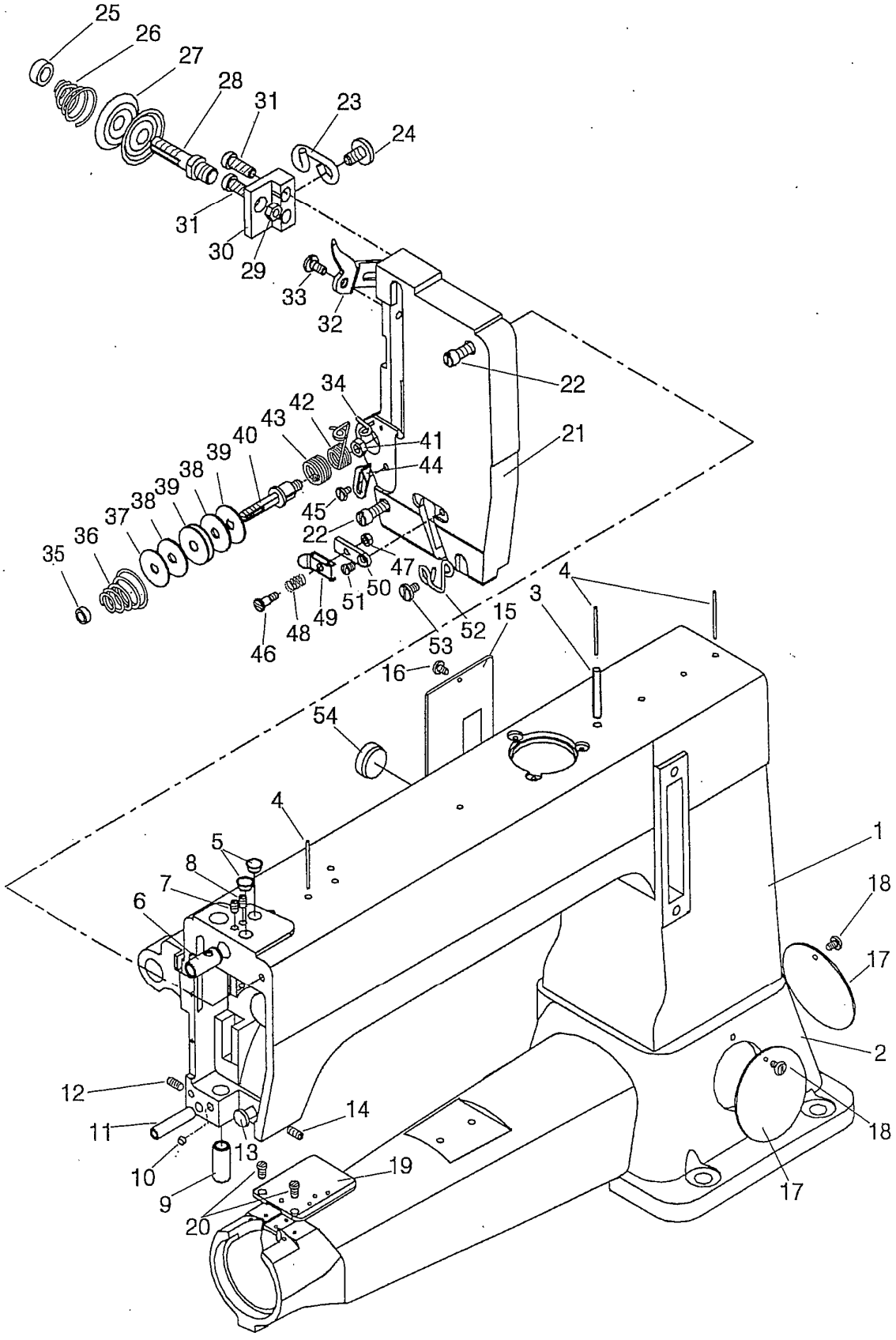

A.ARM BED AND ITS ACCESSORIES

Fig. No.	Part No.	Description	Pcs.	Remarks
A44	H7255B8001	Thread take-up spring guide plate	1	
A45	H3410C301K	Screw	1	SM9/64(40)×6.5
A46	H7257B8001	Screw	1	SM1/8(44)
A47	H7258B8001	Nut	1	SM1/8(44)
A48	H7259B8001	Tension spring	1	
A49	H7260B8001	Tension disc	1	
A50	H7261B8001	Thread tension regulator complete base	1	
A51	HA7311CC06	Screw	1	SM9/64(40)×6
A52	H7262B8001	Thread guide	1	
A53	H3410C301K	Screw	1	SM9/64(40)×6.5
A54	HA300B2100	Rubber plug	1	

B.NEEDLE BAR AND THREAD TAKE-UP MECHANISM

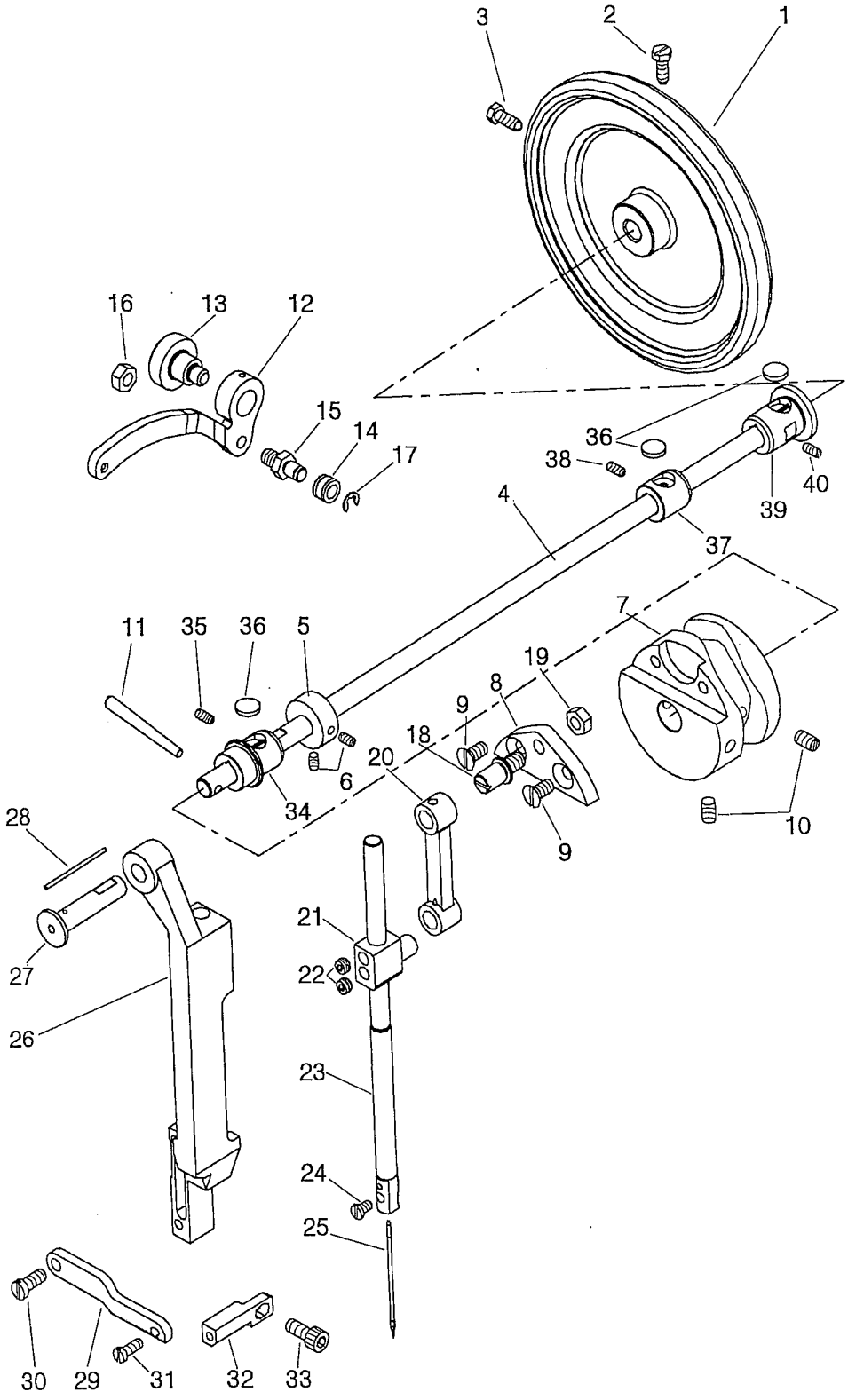

B.NEEDLE BAR AND THREAD TAKE-UP MECHANISM

Fig. No.	Part No.	Description	Pcs.	Remarks
B01	H7204C8001	Pulley	1	
B02	H7205C8001	Screw	1	SM5/16(24)×22.4
B03	H7206C8001	Screw	1	SM5/16(24)×21.4
B04	H7208C8001	Arm shaft	1	
B05	HA108G0661	Collar	1	
B06	HA105D0662	Screw	2	SM1/4(40)×6
B07	H7209C8001	Thread thke-up cam	1	
B08	H7210C8001	Needle bar connecting base link screw	1	
B09	H403060120	Screw	2	GB/T68 M6×12
B10	H4933K8001	Screw	2	SM1/4(40)×10
B11	H602040450	Pin	1	GB/T117 4×45
B12	H7211C8001	Thread take-up lever	1	
B13	H7212C8001	Screw	1	
B14	H7213C8001	Roller	1	
B15	H7214C8001	Roller pin	1	
B16	H2010J0066	Nut	1	SM9/32(28)
B17	H007013050	Retaining ring-E type	1	GB/T896 5
B18	H7215C8001	Needle bar connecting link screw	1	
B19	H2010J0066	Nut	1	SM9/32(28)
B20	H7216C8001	Needle bar connecting link	1	
B21	H7217C8001	Needle bar connecting stud	1	
B22	H7218C8001	Screw	2	SM1/4(40)×4.5
B23	H7219C8001	Needle bar	1	
B24	HA700F2100	Screw	1	SM11/64(40)×7
B25	H7220C8001	Needle	1	DY*3 26#
B26	H7222C8001	Needle bar guide bracket	1	
B27	H7223C8001	Needle bar guide bracket pin	1	
B28	H7224C8001	Oil wick	1	
B29	H7225C8001	Needle bar guide bracket plate	1	
B30	H3208G0676	Screw	1	SM15/64(28)×10.5
B31	HA111G0683	Screw	1	SM11/64(40)×12
B32	H7226C8001	Needle bar guide bracket plate base	1	
B33	H415060140	Screw	1	GB/T70.1 M6×14
B34	H7213B8001	Bushing	1	
B35	H2405D0664	Screw	1	SM15/64(28)×14
B36	H7214B8001	Felt	3	
B37	H7212B8001	Bushing	1	
B38	H2405D0664	Screw	1	SM15/64(28)×14
B39	H7211B8001	Bushing	1	
B40	H2405D0664	Screw	1	SM15/64(28)×14

C.LOWER SHAFT MECHANISM

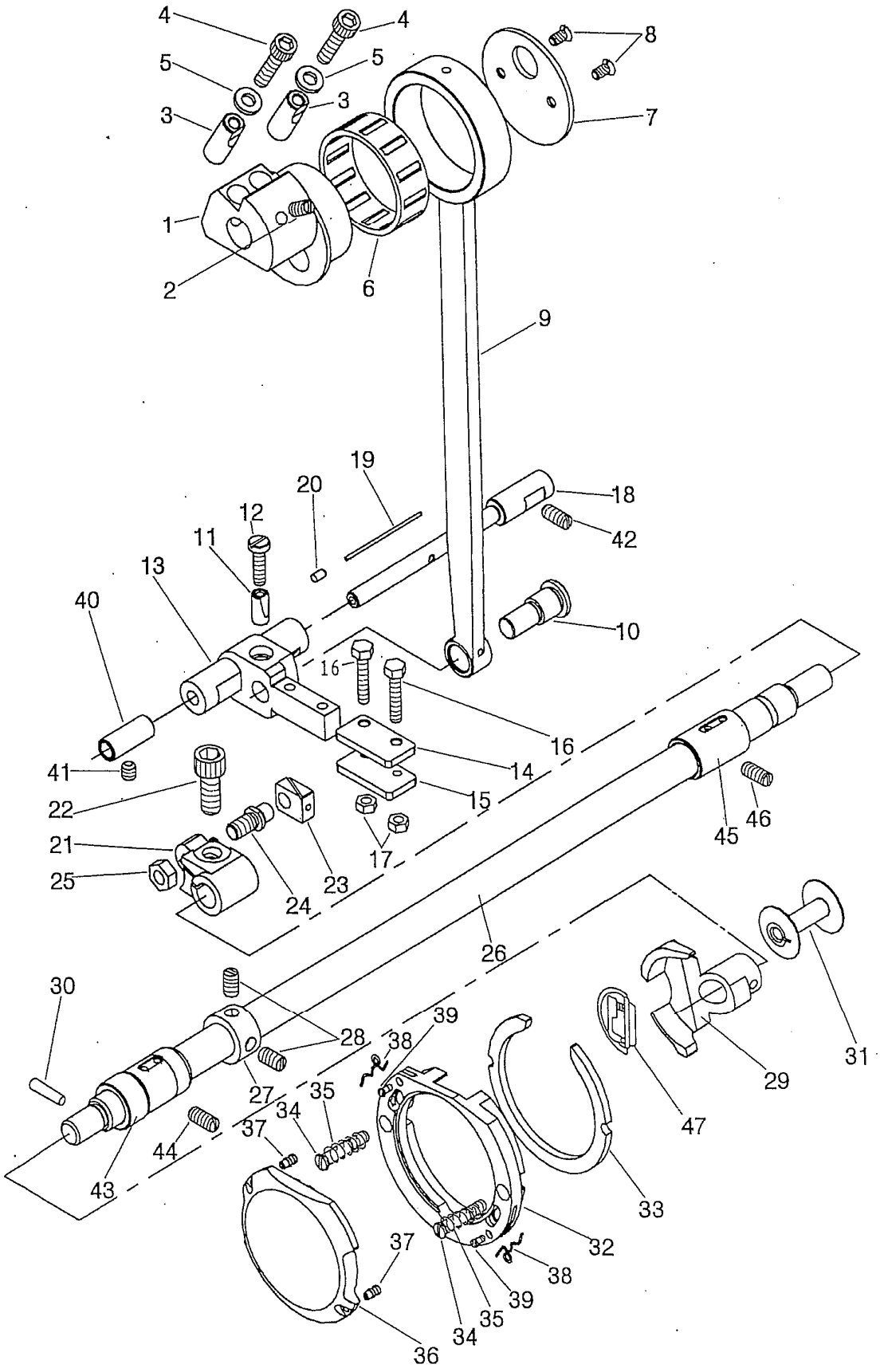

C.LOWER SHAFT MECHANISM

Fig. No.	Part No.	Description	Pcs.	Remarks
C01	H7204D8001	Eccentric	1	
C02	H7205D8001	Screw	1	SM15/64(28)×12
C03	H7206D8001	pin	2	
C04	H415060250	Screw	2	GB/T70.1 M6×25
C05	H4728H8001	Washer	2	
C06	H7237D8001	Bearing	1	K43×48×17(NTN)
C07	H7207D8001	Eccentric cover	1	
C08	H2000B2050	Screw	2	SM11/64(40)×9
C09	H7208D8001	Crank connecting rod	1	
C10	H7209D8001	Crank connecting rod pin	1	
C11	H7210D8001	Pin	1	
C12	H7211D8001	Screw	1	SM3/16(32)×18
C13	H7213D8001	Shuttle shaft	1	
C14	H7214D8001	Plate	1	
C15	H7215D8001	Plate	1	
C16	H7216D8001	Screw	2	
C17	H2000M0120	Nut	2	SM11/64(40)
C18	H7218D8001	Inside Shaft	1	
C19	H7219D8001	Oil wick	1	
C20	H7220D8001	Rivet	1	
C21	H7222D8001	Lower shaft crank	1	
C22	H415080200	Screw	1	GB/T70.1 M8×20
C23	H7223D8001	Shuttle shaft slide block	1	
C24	H7224D8001	Screw	1	
C25	H2010J0066	Nut	1	SM9/32(28)
C26	H7226D8001	Lower shaft	1	
C27	HA108G0661	Collar	1	
C28	H7239D8001	Screw	2	SM1/4(40)×3.5
C29	H7227D8001	Shuttle driver	1	
C30	H602040220	Pin	1	GB/T117 4×22
C31	H7228D8001	Bobbin	1	
C32	H7229D8001	Shuttle race body	1	
C33	H7230D8001	Shuttle race back ring	1	
C34	H7231D8001	Screw	2	SM3/16(28)
C35	H7232D8001	Spring	2	
C36	H7233D8001	Shuttle race cap	1	
C37	H7234D8001	Screw	2	SM1/8(44)
C38	H7235D8001	Spring	2	
C39	H7236D8001	Screw	2	SM3/32(56)
C40	H7234B8001	Bushing	1	
C41	HA3411D308	Screw	1	SM15/64(28)×7
C42	HA100C2020	Screw	1	SM15/64(28)×10
C43	H7230B8001	Bushing	1	

C.LOWER SHAFT MECHANISM

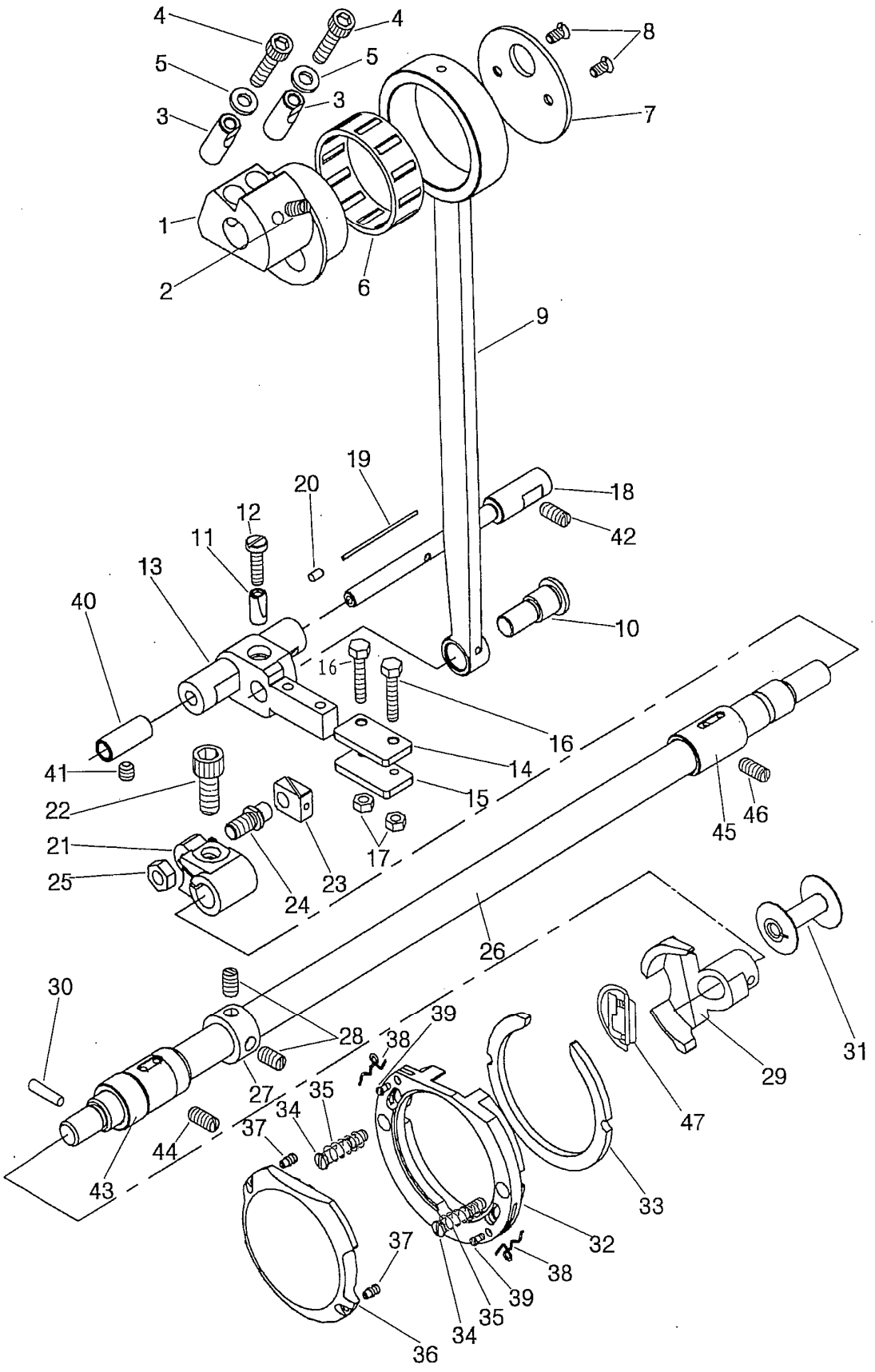

C.LOWER SHAFT MECHANISM

Fig. No.	Part No.	Description	Pcs.	Remarks
C44	H2405D0664	Screw	1	SM15/64(28)×14
C45	H7229B8001	Bushing	1	
C46	H2405D0664	Screw	1	SM15/64(28)×14
C47	H7240D7101	Shuttle hook	1	KSP-204N(佐文)

D.FEEDING MECHANISM

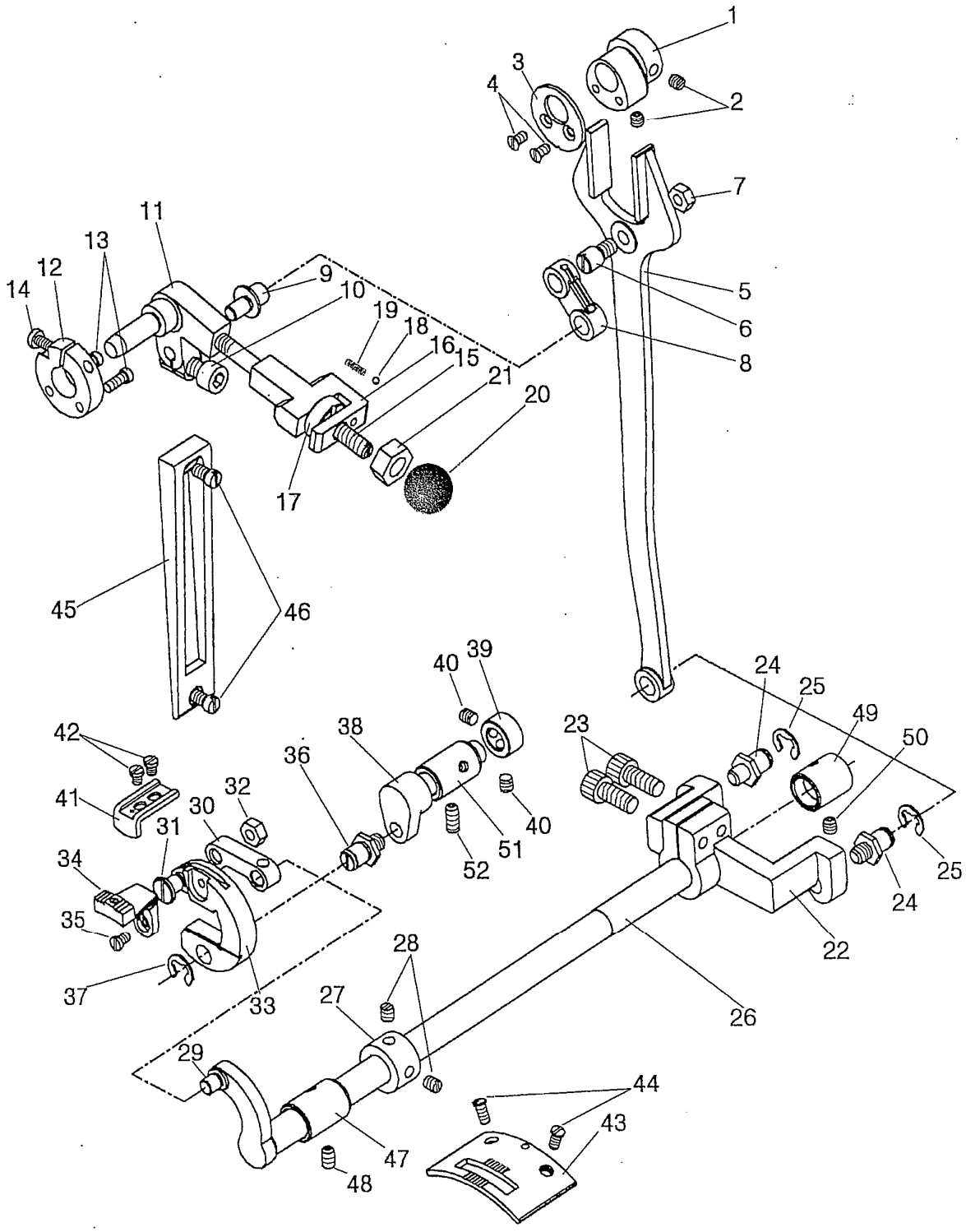

D.FEEDING MECHANISM

Fig. No.	Part No.	Description	Pcs.	Remarks
D01	H7205E8001	Feed cam	1	
D02	H7206E8001	Screw	2	SM15/64(28)×6
D03	H7207E8001	Feed cam cover	1	
D04	H2000B2050	Screw	2	SM11/64(40)×9
D05	H7208E8001	Feed forked connection	1	
D06	H7209E8001	Feed forked connection crank pin	1	
D07	H2010J0066	Nut	1	SM9/32(28)
D08	H7210E8001	Stitch length connecting link	1	
D09	H7211E8001	Stitch length connecting link crank pin	1	
D10	H415050140	Screw	1	GB/T70.1 M5×14
D11	H7212E8001	Stitch length adjusting pin	1	
D12	H7213E8001	Damping plate	1	
D13	HA104G0012	Screw	2	SM3/16(28)×12
D14	H7211D8001	Screw	1	SM3/16(32)×18
D15	H7214E8001	Stitch length adjusting bolt	1	
D16	H7215E8001	Stitch length limited plate	1	
D17	H7216E8001	Nut	1	
D18	HE01032	Metal ball	1	GB/T308 3.175
D19	H7217E8001	Spring	1	
D20		Plastic ball	1	JB/T7271.1 M8×32
D21	H003008080	Nut	1	GB/T6172.1 M8
D22	H7218E8001	Feed driving rock shaft crank	1	
D23	H415060200	Screw	2	GB/T70.1 M6×20
D24	H7219E8001	Feed driving rock shaft crank pin	2	
D25	H007013080	Retaining ring-E type	2	GB/T896 8
D26	H7220E8001	Feed driving rock shaft	1	
D27	HA108G0661	Collar	1	
D28	H7239D8001	Screw	2	SM1/4(40)×3.5
D29	H7221E8001	Crank pin	1	
D30	H7222E8001	Feed driving connecting link	1	
D31	H7223E8001	Feed driving connecting link crank pin	1	
D32	H2013N0067	Nut	1	SM1/4(24)
D33	H7225E8001	Feed dog base	1	
D34	H7226E8001	Feed dog	1	
D35	HA700F2100	Screw	1	SM11/64(40)×7
D36	H7219E8001	Feed lifting rock shaft crank pin	1	
D37	H007013080	Retaining ring-E type	1	GB/T896 8
D38	H7227E8001	Feed lifting rock shaft	1	
D39	H7228E8001	Collar	1	
D40	H7239D8001	Screw	2	SM1/4(40)×3.5
D41	H7229E8001	Feed dog base limited plate	1	
D42	H5711G8001	Screw	2	SM11/64(40)×6
D43	H7230E8001	Needle plate	1	

D.FEEDING MECHANISM

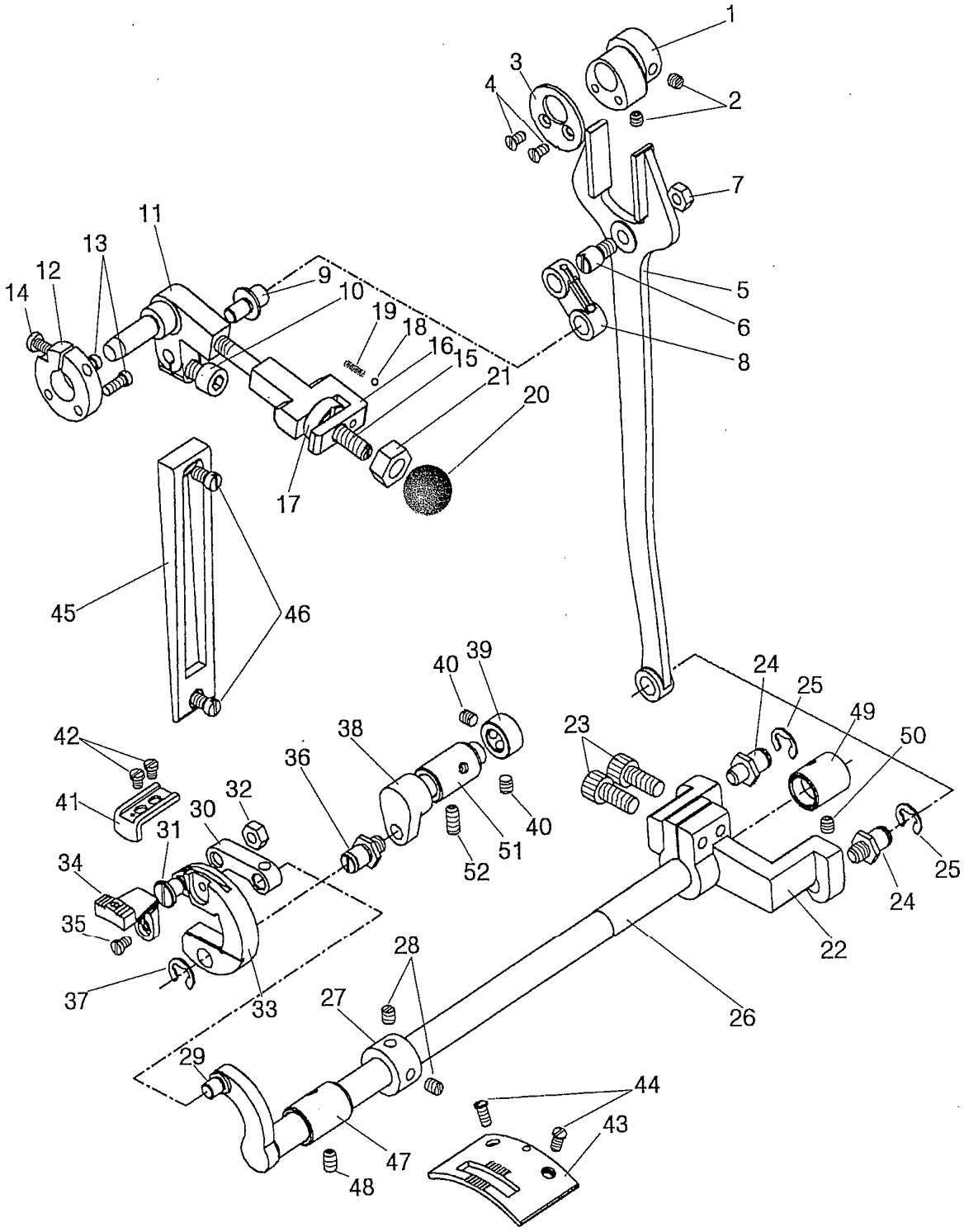

D.FEEDING MECHANISM

Fig. No.	Part No.	Description	Pcs.	Remarks
D44	H7231E8001	Screw	2	SM3/16(28)×9.5
D45	H7232E8001	Stitch length outside plate	1	
D46	HA104F0654	Screw	2	SM15/64(28)×9
D47	H7232B8001	Bushing	1	
D48	HA100C2020	Screw	1	SM15/64(28)×10
D49	H7231B8001	Bushing	1	
D50	HA3411D308	Screw	1	SM15/64(28)×7
D51	H7233B8001	Bushing	1	
D52	H2405D0664	Screw	1	SM15/64(28)×14

E.PRESSER FOOT MECHANISM

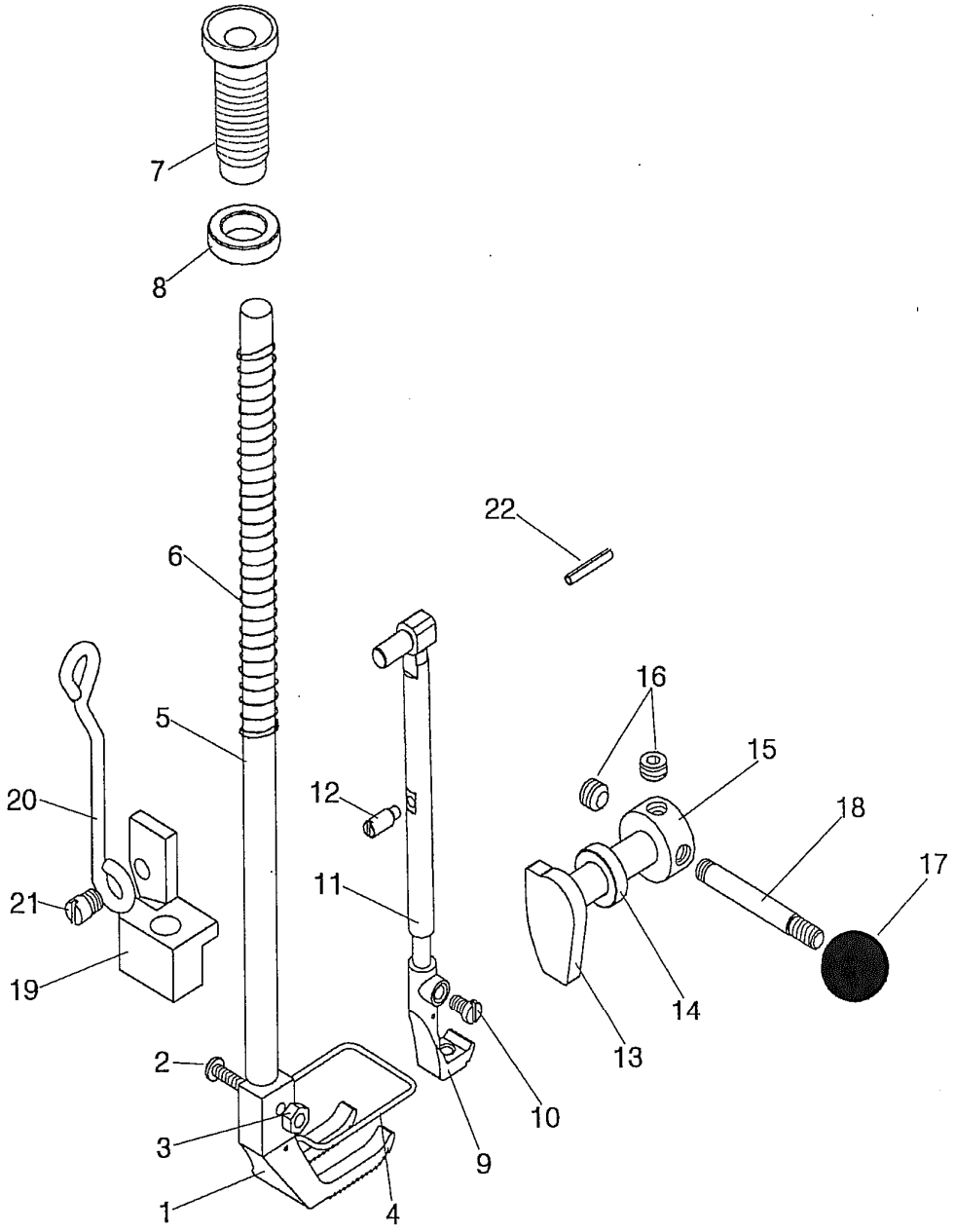

E.PRESSER FOOT MECHANISM

Fig. No.	Part No.	Description	Pcs.	Remarks
E01	H7204F8001	Presser foot	1	
E02	H7205F8001	Screw	1	SM9/64(40)×14
E03	HA710P0673	Nut	1	SM9/64(40)
E04	H7206F8001	Finger guard	1	
E05	H7207F8001	Presser bar	1	
E06	H7208F8001	Presser bar spring	1	
E07	H7209F8001	Thumb screw	1	SM5/8(28)
E08	H7210F8001	Nut	1	
E09	H7211F8001	Walking foot	1	
E10	HA719B0709	Screw	1	SM11/64(40)×7
E11	H7212F8001	Presser bar	1	
E12	H7213F8001	Screw	1	
E13	H7214F8001	Presser bar lifting shaft	1	
E14	H7215F8001	Washer	1	
E15	H7217F8001	Collar	1	
E16	H7218C8001	Screw	2	SM1/4(40)×4.5
E17		Plastic ball	1	JB/T7271.1 M6×20
E18	H7219F8001	Bolt	1	
E19	H7220F8001	Presser bar guide bracket	1	
E20	H7221F8001	Connecting rod	1	
E21	H7222F8001	Screw	1	SM1/4(40)×40
E22	H609030180	Pin	1	GB/T879.1 3×18

F.UPPER FEED LIFTING ROCK SHAFT MECHANISM

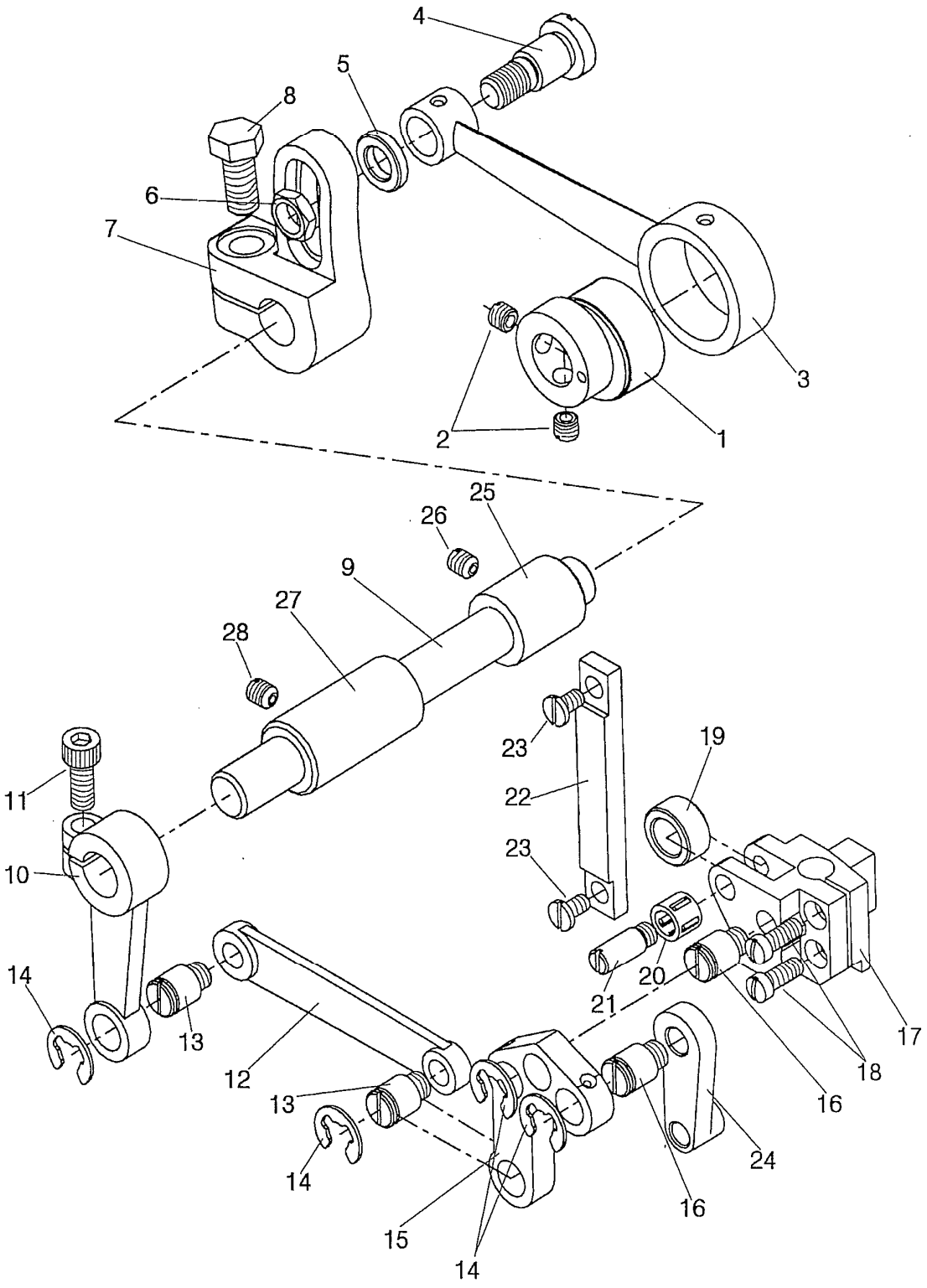

F.UPPER FEED LIFTING ROCK SHAFT MECHANISM

Fig. No.	Part No.	Description	Pcs.	Remarks
F01	H7204G8001	Presser foot lifting eccentric	1	
F02	HA307C0066	Screw	2	SM1/4(40)×6
F03	H7205G8001	Eccentric connecting link	1	
F04	H7206G8001	Screw	1	
F05	H7207G8001	Washer	1	
F06	H7208G8001	Nut	1	SM11/32(28)
F07	H7209G8001	Adjusting crank	1	
F08	H7210G8001	Screw	1	SM5/16(18)
F09	H7211G8001	Presser foot lifting shaft	1	
F10	H7212G8001	Presser foot lifting shaft crank	1	
F11	H415060140	Screw	1	GB/T70.1 M6×14
F12	H7213G8001	Presser foot lifting connecting link	1	
F13	H7214G8001	Screw	2	
F14	H007013080	Retaining ring-E type	4	GB/T896 8
F15	H7215G8001	Presser foot lifting lever	1	
F16	H7214G8001	Screw	2	
F17	H7216G8001	Presser foot lifting lever base	1	
F18	HA104G0012	Screw	2	SM3/16(28)×12
F19	H7217G8001	Roller	1	
F20	H7221G8001	Bearing	1	IS0 K7
F21	H7218G8001	Screw	1	SM15/64(28)
F22	H7219G8001	Roller base plate	1	
F23	HA700B2060	Screw	2	SM3/16(32)×8
F24	H7220G8001	Walking foot lifting connecting link	1	
F25	H7221B8001	Bushing	1	
F26	HA3411D308	Screw	1	SM15/64(28)×7
F27	H7222B8001	Bushing	1	
F28	HA3411D308	Screw	1	SM15/64(28)×7

G.NEEDLE BAR ROCKING MOTION MECHANISM

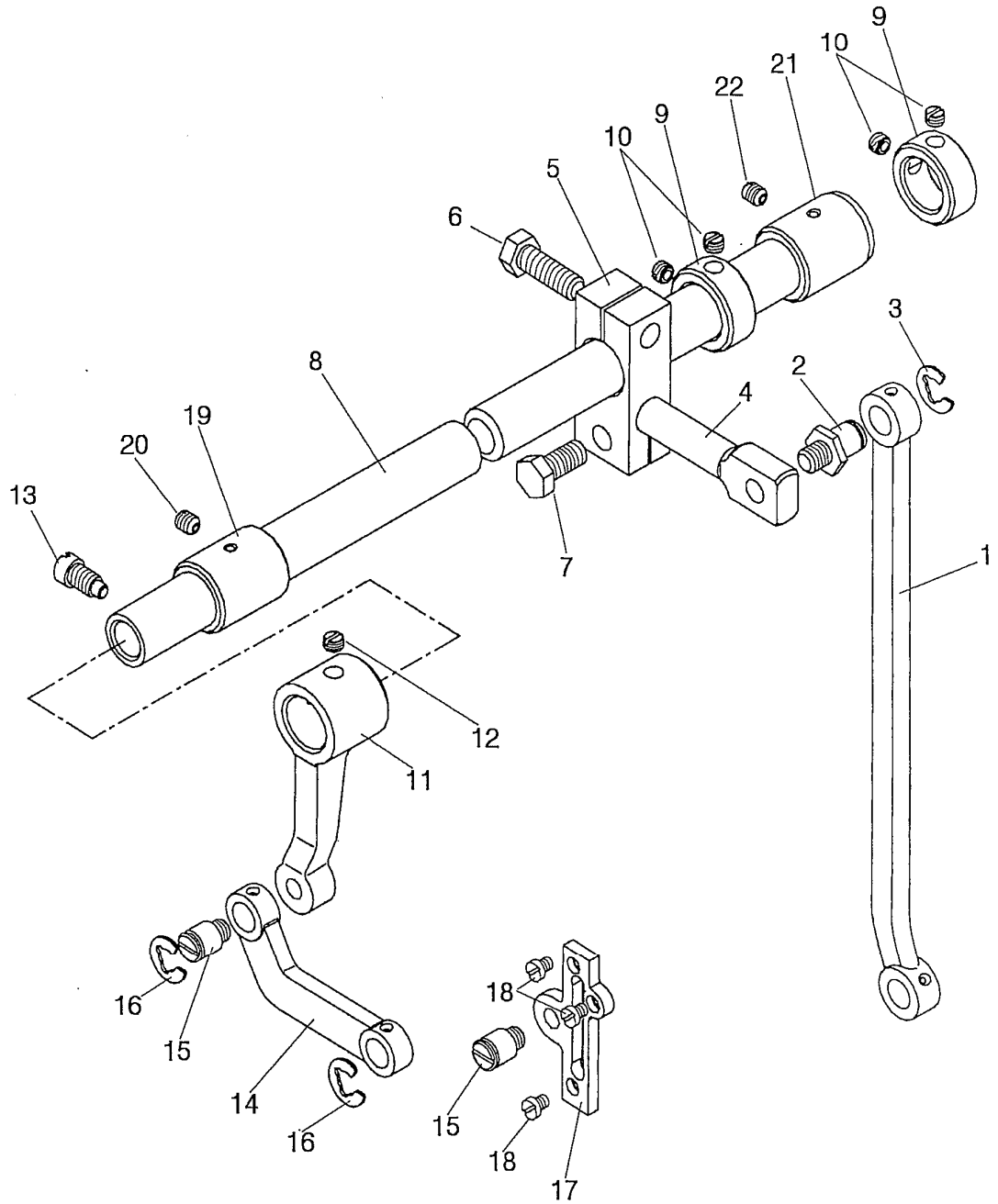

G.NEEDLE BAR ROCKING MOTION MECHANISM

Fig. No.	Part No.	Description	Pcs.	Remarks
G01	H7204H8001	Needle bar rocking connecting link	1	
G02	H7219E8001	Screw	1	
G03	H007013080	Retaining ring-E type	1	GB/T896 8
G04	H7206H8001	Adjusting crank	1	
G05	H7207H8001	Adjusting crank base	1	
G06	H7208H8001	Screw	1	
G07	H7210G8001	Screw	1	
G08	H7209H8001	Needle bar rock shaft	1	
G09	H7210H8001	Collar	2	
G10	HA105D0662	Screw	4	SM1/4(40)×4.5
G11	H7211H8001	Needle bar rocking crank	1	
G12	H7218C8001	Screw	1	SM1/4(40)×4.5
G13	HA100C2070	Screw	1	SM9/32(28)×14
G14	H7212H8001	Needle bar rocking connecting link	1	
G15	H7214G8001	Screw	2	
G16	H007013080	Retaining ring-E type	2	GB/T896 8
G17	H7213H8001	Screw base	1	
G18	H7214H8001	Screw	3	SM11/64(40)×4.5
G19	H7224B8001	Bushing	1	
G20	HA3411D308	Screw	1	SM15/64(28)×7
G21	H7223B8001	Bushing	1	
G22	HA3411D308	Screw	1	SM15/64(28)×7

H.KNEE LIFTER MECHANISM

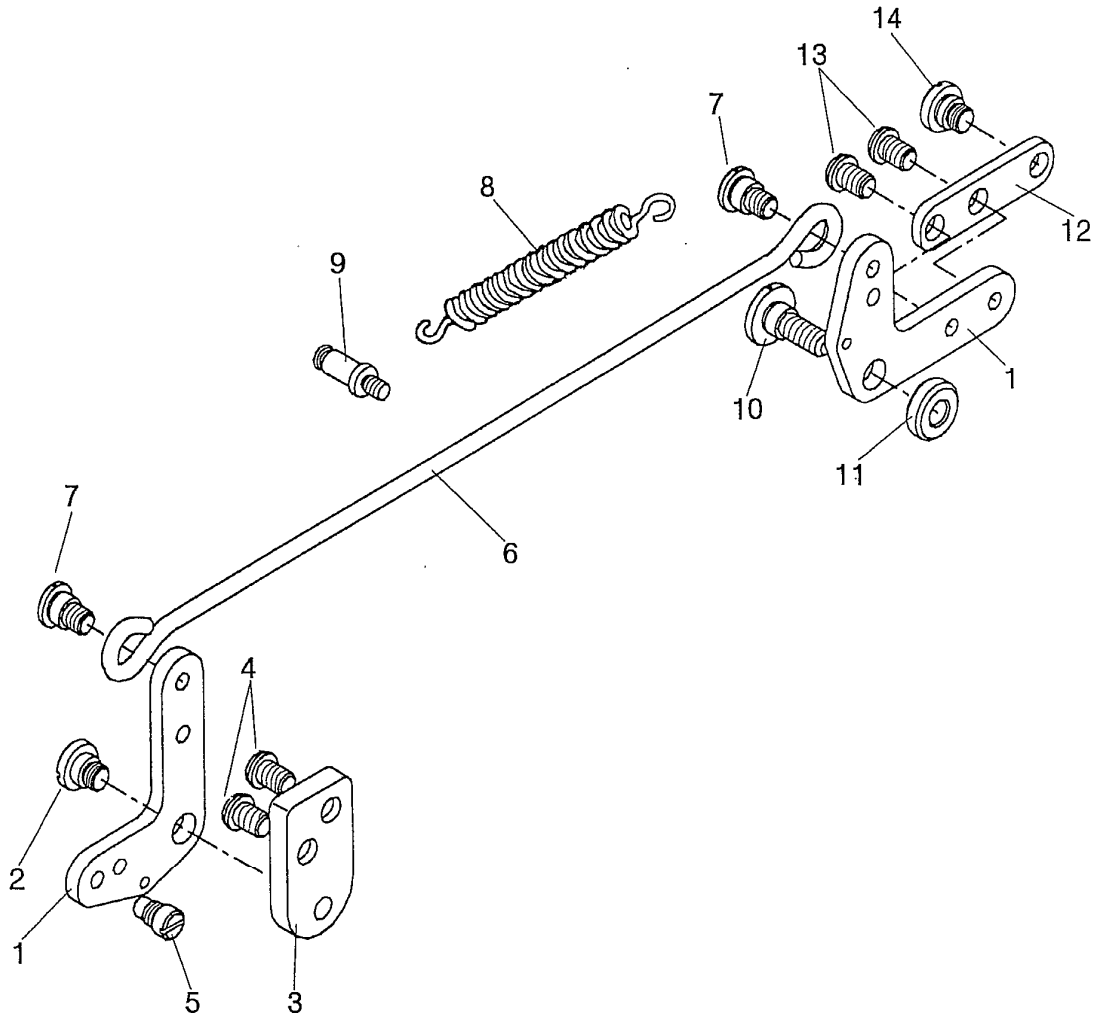

H.KNEE LIFTER MECHANISM

Fig. No.	Part No.	Description	Pcs.	Remarks
H01	H7204I8001	Knee lifter lever	2	
H02	H7205I8001	Screw	1	SM15/64(28)×6
H03	H7206I8001	Knee lifter lever base	1	
H04	HA300J2280	Screw	2	SM15/64(28)×6.5
H05	H7207I8001	Screw	1	SM15/64(28)×8
H06	H7208I8001	Knee lifter rod	1	
H07	H7205I8001	Screw	2	SM15/64(28)×6
H08	H7209I8001	Coil spring	1	
H09	H7210I8001	Screw	1	
H10	H7211I8001	Screw	1	SM15/64(28)×13
H11	H7212I8001	Washer	1	
H12	H7214I8001	Knee lifter lever connecting plate	1	
H13	HA300J2280	Screw	2	SM15/64(28)×6.5
H14	H7213I8001	Screw	1	SM1/4(40)×3.5

I.BOBBIN WINDER MECHANISM

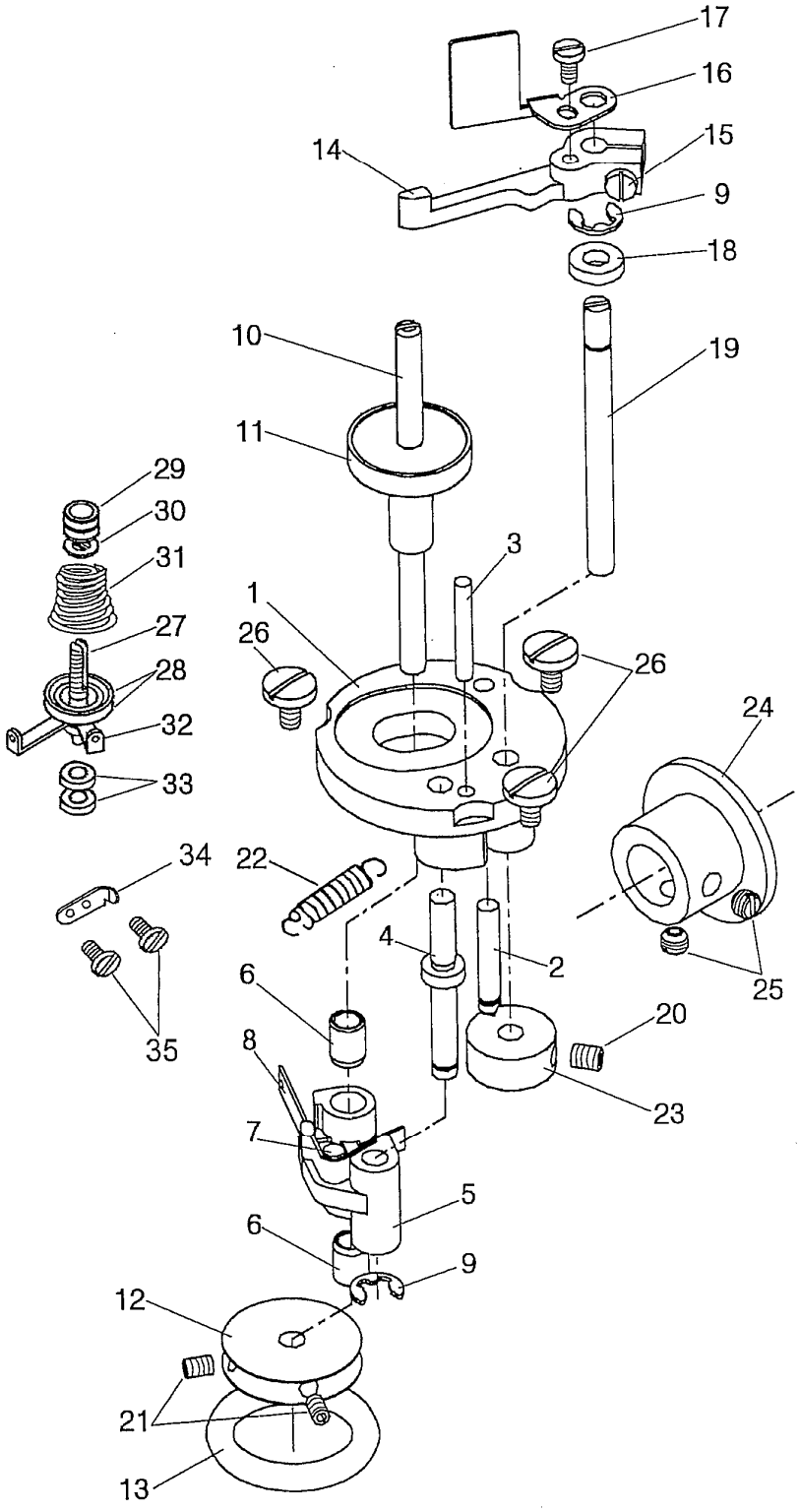

I.BOBBIN WINDER MECHANISM

Fig. No.	Part No.	Description	Pcs.	Remarks
I01	H6706N8001	Bobbin winder plate	1	
I02	H6707N8001	Pin	1	
I03	H6708N8001	Pin	1	
I04	H7210J8001	Bobbin winder crank shaft	1	
I05	H7213J8001	Bobbin winder crank	1	
I06	H6713N8001	Bushing	2	
I07	H6714N8001	Pin	1	
I08	H6715N8001	Bobbin winder spring	1	
I09	H007013050	Retaining ring-E type	2	GB/T896 5
I10	H7205J8001	Bobbin winder shaft	1	
I11	H6717N8001	Bobbin base	1	
I12	H7214J8001	Driven wheel	1	
I13	H6658B8001	Friction rubber band	1	
I14	H6720N8001	Bobbin winder lever	1	
I15	HA100H2150	Screw	1	SM9/64(40)×11
I16	H7206J8001	Winding length limited plate	1	
I17	H3200B2100	Screw	1	
I18	H6722N8001	Washer	1	
I19	H6723N8001	Pin	1	
I20	H6731N8001	Screw	1	M5×6
I21	H431030040	Screw	2	HRC34-48 表面磷化发黑
I22	H6724N8001	Spring	1	
I23	H6725N8001	Bobbin winder cam	1	
I24	H7005D8001	Driving wheel	1	
I25	H4723D8001	Screw	2	SM15/64(28)×4.5
I26	H3107G0662	Screw	3	SM11/64(40)×8
I27	H7208J8001	Screw	1	
I28	HA310B0705	Tension disc	2	
I29	HA115B0702	Nut	1	
I30	HA115B7010	Limited plate	1	
I31	H3300B2040	Spring	1	
I32	H6662B8001	Thread guide	1	
I33	H003008040	Washer	2	GB/T6172.1 M4
I34	H6756B8001	Blade	1	
I35	HA500C2070	Screw	2	SM9/64(40)×5

J.ACCESSORIES

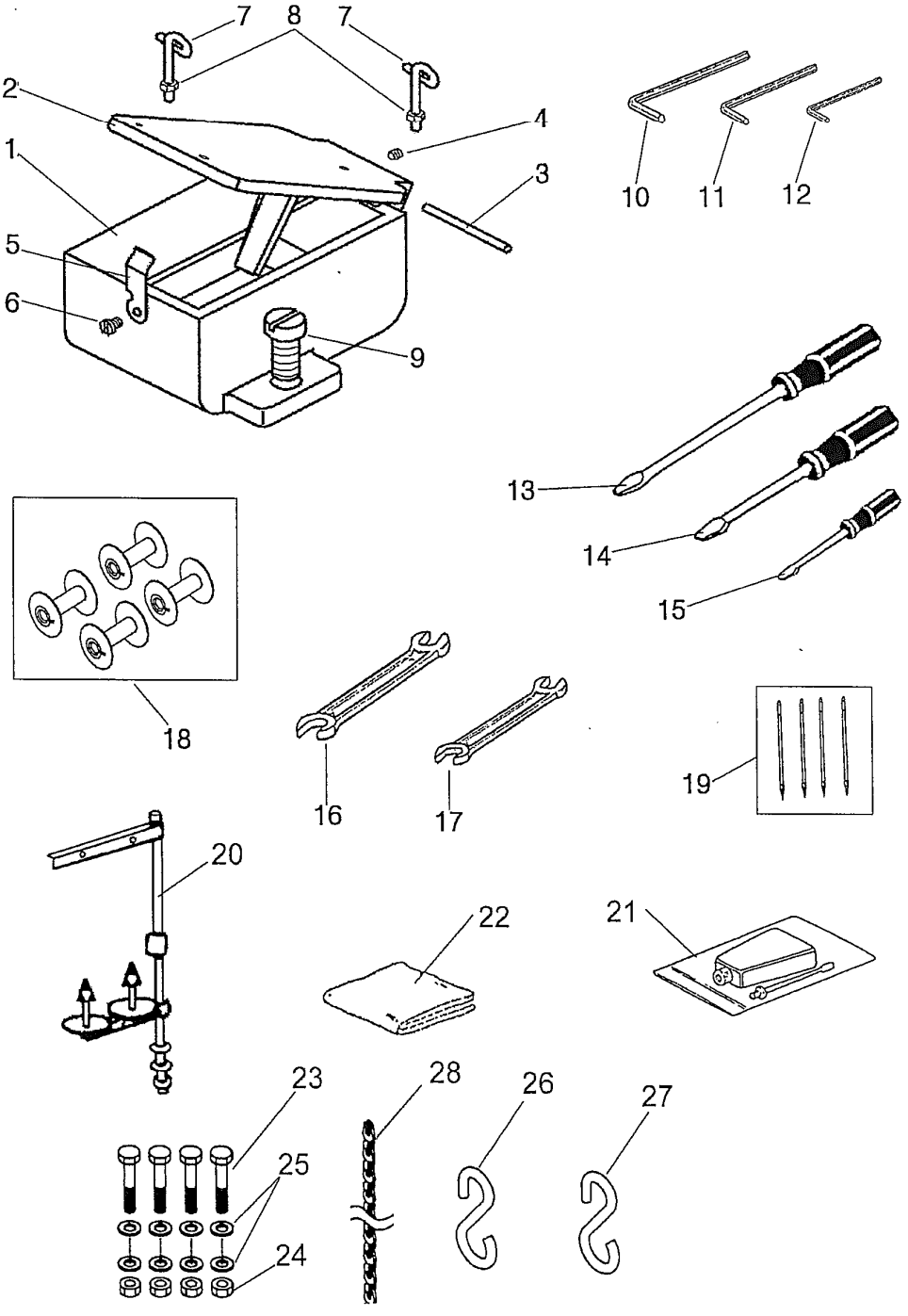

J.ACCESSORIES

Fig. No.	Part No.	Description	Pcs.	Remarks
J01	H7207K8001	Silicon oil box	1	
J02	H7208K8001	Cover	1	
J03	H605030400	Pin	1	GB/T119.2 3×40
J04	H34411C410	Screw	1	SM9/64(40)×4
J05	H7209K8001	Spring	1	
J06	H3215K0693	Screw	1	SM9/64(40)×5
J07	H7210K8001	Thread guide	2	
J08	H7211K8001	Nut	2	SM3/32(56)
J09	HA800F2020	Screw	1	SM15/64(28)×13.5
J10	HB01050	Hexagon socket screw key	1	GB/T5356 5
J11	HB01040	Hexagon socket screw key	1	GB/T5356 4
J12	HB01030	Hexagon socket screw key	1	GB/T5356 3
J13	HA300J2070	Screw driver (size L)	1	
J14	HA300J2200	Screw driver (size M)	1	
J15	HA300J2210	Screw driver (size S)	1	
J16	90110	Spanner	1	GB/T4388 9×11
J17	100130	Spanner	1	GB/T4388 10×13
J18	H7228D8001	Bobbin	4	
J19	H7220C8001	Needle	4	DY*3 26#
J20	HA200J2030	Thread stand assy	1	
J21	H2004O0069	Oiler	1	聚丙烯
J22	H7212K8001	Head cover	1	聚氯乙烯
J23	H103100700	Screw	4	GB/T5782 M10×70
J24	H003002100	Nut	4	GB/T6170 M10
J25	H005001100	Washer	8	GB/T97.1 10
J26	HPG100E202	Hook	1	
J27	H7235K8001	Hook	1	
J28		Chain	1	1100mm