DIDO

1350004

SCREEN PRINTING SOLUTIONS

OVEN WITH DRAWERS DRYING PRINTED FABRICS

OPTIONAL ACCESSORIES

INFRARED THERMOMETER

CHIOSSI E CAVAZZUTI
SCREEN PRINTING SOLUTIONS

via Costituzione 50/D 42015 Correggio (RE) Italy
tel. +39 0522 637224 fax. +39 0522 631180 cc@chiossiecavazzuti.com

ALL DATA, PICTURES AND FEATURES SHOWN ARE PURELY INDICATIVE AND HAVE NO LEGAL VALIDITY

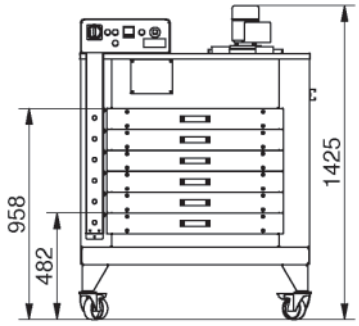

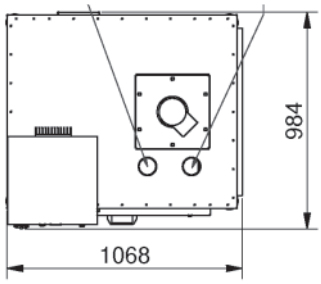

DiDO Dimensions

FEATURES

Hot air oven with drawers for drying water-based or plastisol inks. Maximum working temperature is 180°C. Air is warmed by electrical heating elements. Air is pushed in the drawer horizontally in order to be everywhere uniform. Filtered air is keeping the fan and the conduct clean, improving efficiency. The oven is equipped with exhaust fumes pipe and is ready for the application of an heat exchanger. Each drawer is independent and equipped with a timer. A led light on the side and a sound alarm advise when the time is reached.

ADVANTAGES

DiDO is mainly studied to dry inks digitally printed on dark fabrics. It works well with generally long drying process with control of temperature and efficient air circulation, like flocked garments need. DiDO is ideal for small factories thanks to its reduced dimensions and low consumption. Hour production is approx 60 pieces with a permanence of 5-6 minutes per drawer. Perfect for fine textiles, like Lycra, wool, silk, etc...

TECHNICAL DATA DIDO 700 X 700

VOLTAGE	**400 V+N+PE**
CURRENT	**13 A**
POWER (max)	**9,2 kW**
MAX WORKING TEMPERATURE	**180°C**
DRAWER DIMENSIONS	**700 x 700 x 70 mm**
NUMBER OF DRAWERS	**6**
EXHAUST FUMES FLOW RATE	**200 m³/h**
DIMENSIONS	**1068 x 984 x 1425 mm**
WEIGHT	**250 kg**

CHIOSSI E CAVAZZUTI
SCREEN PRINTING SOLUTIONS

via Costituzione 50/D 42015 Correggio (RE) Italy
tel. +39 0522 637224 fax. +39 0522 631180 cc@chiossiecavazzuti.com

ALL DATA, PICTURES AND FEATURES SHOWN ARE PURELY INDICATIVE AND HAVE NO LEGAL VALIDITY